# Operating Instructions

# HYDROVAR® *Smart*


210981-2
*Smart* 4-ENN

ITT Industries
*Engineered for life*

# Index

**Follow the Pump Operating and Maintenance Instructions**

We reserve the right to alter specifications

# 1 Important safety instructions

**Read and follow the operating instructions and safety instructions carefully before starting operations! All modifications must be done by qualified technicians!**

**In addition to the instructions contained in these operating instructions please pay attention to universal safety and accident prevention regulations.**

The HYDROVAR-*Smart* drive head must be disconnected from the power supply before any work can be carried out in the electrical or mechanical part of the system.
Installation, maintenance and repair work may only be carried out by trained, skilled and qualified personnel.
Unauthorised modifications or changes to the system make all guarantees null and void.
When in operation, the motor can be stopped by remote control, whereby the inverter and the motor remain under voltage. For safety reasons, the unit has to be disconnected from the power supply when carrying out work on the machinery as locking out the equipment by switching off the release mechanism or set value cannot prevent accidental starting of the motor.

The HYDROVAR-*Smart* works with a low voltage supply of 24VAC/DC. Nevertheless it is not allowed to touch any parts of the unit, when power supply is on. Because of the possibility to connect external voltages to the relays, at some places of the HYDROVAR-*Smart*, there can be dangerous voltages!

**Touching these components seriously endangers life !**

Before removing the HYDROVAR-*SMART* the system must be disconnected from the power supply. After switching off the power supply wait **at least 5 minutes** before starting work on or in the HYDROVAR-*SMART* drive head (the capacitors in the intermediate circuit of the inverter have to be discharged by the installed discharge resistors first).
Please refer also to the instruction manual of the connected frequency converter and read it carefully!

Furthermore, care must be taken not to short circuit the neighbouring components when connecting the external control wires and that open cable ends which are not in use are isolated.

The HYDROVAR-*SMART* control unit contains electronic safety devices which switch off the frequency drive in the event of faults, whereby the motor has zero current but remains energised and comes to a halt. The motor can also be halted by mechanical blocking. If it is switched off electronically the motor is disconnected from the mains voltage through the electronics of the frequency converter but is not potential-free in the circuit.
In addition voltage fluctuations, especially power failures can cause the system to switch off itself.

**Repair of faults can cause the motor to start up again!**

The system is only allowed to be put into operation when it has been earthened. In addition, efficient grounding of all pipes must be ensured.

The operating instructions must be read, understood and followed by the operating personnel. We point out that we accept no liability for damage and operating disorders which are the result of non-compliance with the operating instructions.

Warns that disregarding of the regulations may cause electric shock.

Warns that disregarding of the regulations may cause personal injury or damage to property.

## 2 Technical Data

| HYDROVAR Smart | Supply Voltage | | Output Signal | Weight |
|---|---|---|---|---|
| Type | Voltage | Max. Current | to the Inverter | kg |
| Wall mounting unit | 24 VAC/DC | 130 mA | 0 – 10 VDC | 1,70 |
| Panel mounting unit | 24 VAC/DC | 130 mA | 0 – 10 VDC | 0,5 |

The HYDROVAR-*Smart* is tested according to the following standards:

EN 50081-1
EN 50082-1
EN 61010-1

Ambient temperature: +5° C ... +40°C
Storage temperature: -25° C ... +55° C (+70°C during max. 24 hours.)
Humidity: RH max. 50% at 40°C, Unlimited
RH max. 90% at 20°C, max. 30 days per year
75% average per year (Class F, DIN 40 040)
**Condensation is not permitted !**
Air pollution: The air may contain dry dust as found in workshops where there is no excessive quantity of dust due to machines. Excessive amounts of dust, acids, corrosive gases, salts etc. are not permitted

Class of protection : Wall mounting unit ..... IP 55
Panel mounting unit ... IP 00

# 3 Included components and mounting instructions

## 3.1 Wall mounting unit

### 3.1.1 Layout and Ground connection

The back cover can be opened by removing the 4 screws on the back side of the Hydrovar-*Smart*. For the arrangement of the control terminals, please refer to chapter 4.
The grounding has to be done according to the following pictures.

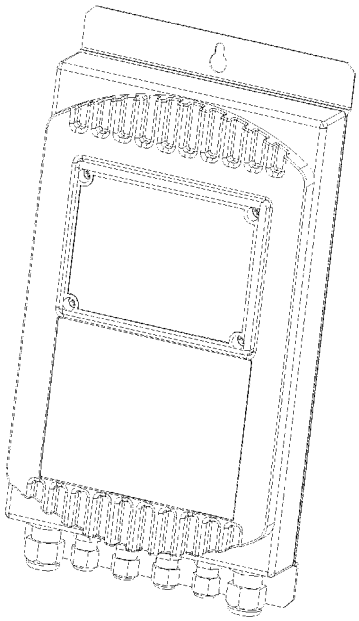

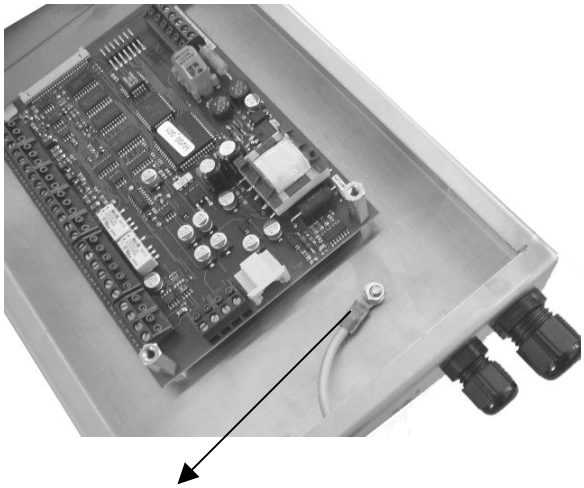

Ground connection

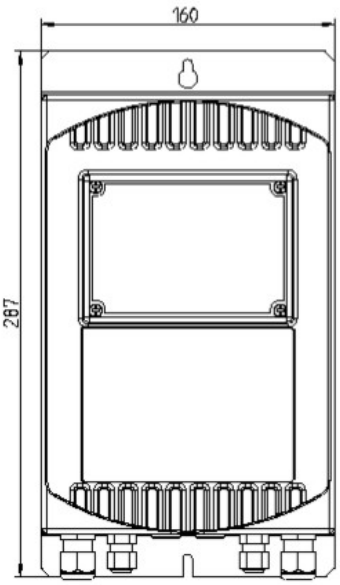


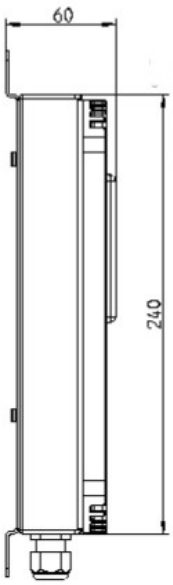


| pcs. | Cable gland type | Max.Cable Ø |
|---|---|---|
| 2 | M16x1,5 | 10mm |
| 2 | M12x1,5 | 7,5mm |
| 2 | Rubber plug for M12 | 7,5mm |

## 3.2 Panel mounting unit

### 3.2.1 Layout and Ground connection

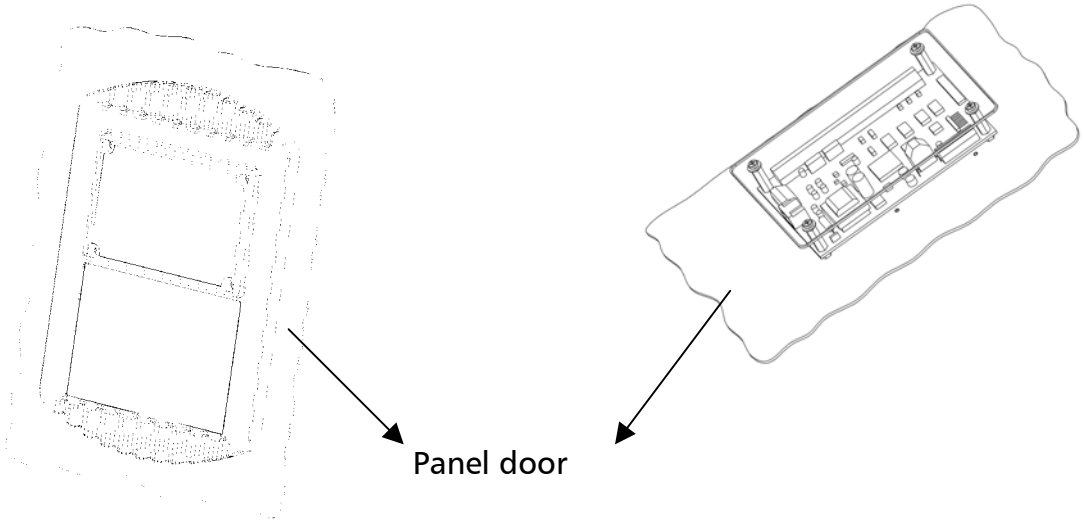


The Ground connection has to be realised over the panel door. No additional grounding required!

Dimensions:

Cutting or punching

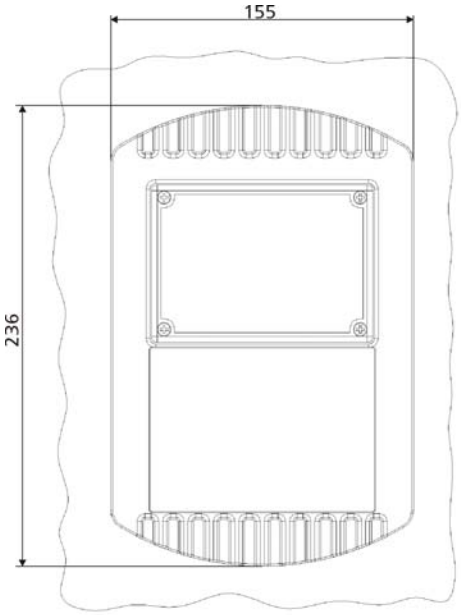


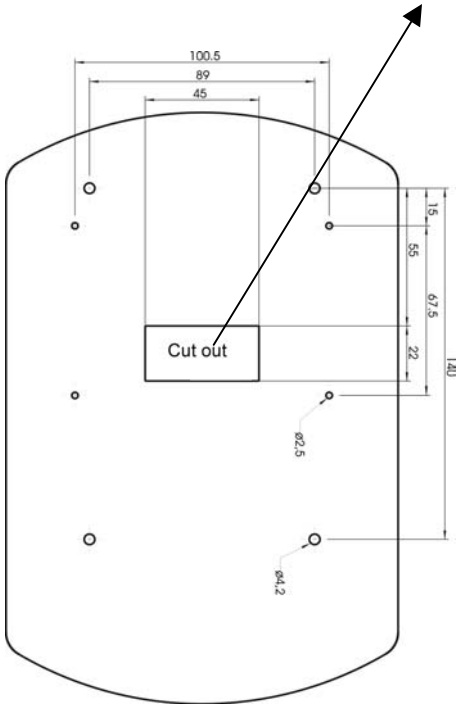


You can find the drilling plan in the real dimensions 1:1 on an enclosed sheet.

### 3.2.2 Included Component

→ 1 x HYDROVAR-*Smart* print
→ 1 x Display unit
→ 1 x Display-sealing
→ 1 x Front cover
→ 1 x Plastic cover
→ 1 x Label (SCH 60.25)
→ 1 x Label (SCH 60.35)
→ 4 x Distance bolt M4xM4x22 I/I
→ 4 x Distance bolt M4xM4x8 A/I
→ 4 x Screw M3x10
→ 4 x Screw M4x10
→ 4 x Screw M4x6
→ 8 x Washer M4

## 3.3 Explosion drawing

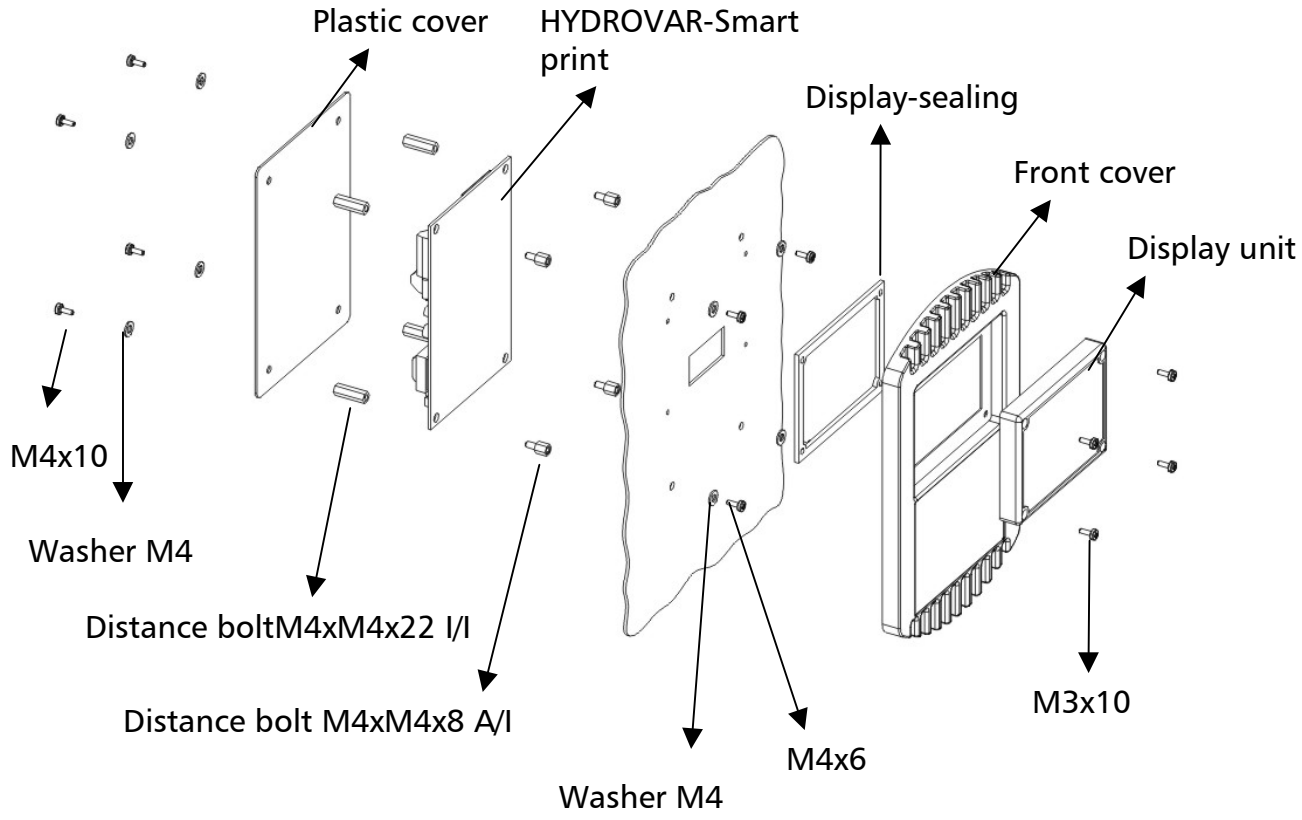


The self-adhesive label SCH 60.25 (with the cut-out for the display) has to be fixed in this way, that the yellow areas are placed on top of the push buttons.

The self-adhesive label SCH 60.35 has to be fixed under the display unit.
A photo of the right place for these labels is shown on the first page of this instruction manual!

### 3.4 Pressure transducer

The sensor of this transmitter is a piezoresistive silicon pressure sensor, mounted on a tape (TAP) freely floating in an oil chamber. The pressure is transferred to the sensor by a separate steel diaphragm in the oil chamber.

**Specification** PA-22S (4-20mA)

| Range (FS): | 10 bar | 16 bar | 25 bar | 40 bar |
|---|---|---|---|---|
| Max. pressure – $P_{max}$: | 20 bar | 30 bar | 50 bar | 80 bar |

Class of protection IP 67
Output signal: 4...20 mA; 2-wire
Supply: 8 – 28 VDC
Operating temperature: -10...80°C kompensated (max. –40...135 °C)
Storage temperature: -40...135°C
Cable length: 2 m (screen)

Material:
Body: 1.4435
Diaphragm: 1.4435
Thread: G ¼"

Electrical connection:
White = Analogue output signal(+ Out) (1)
2 not used
Brown = Supply voltage (+ VCC) (3)

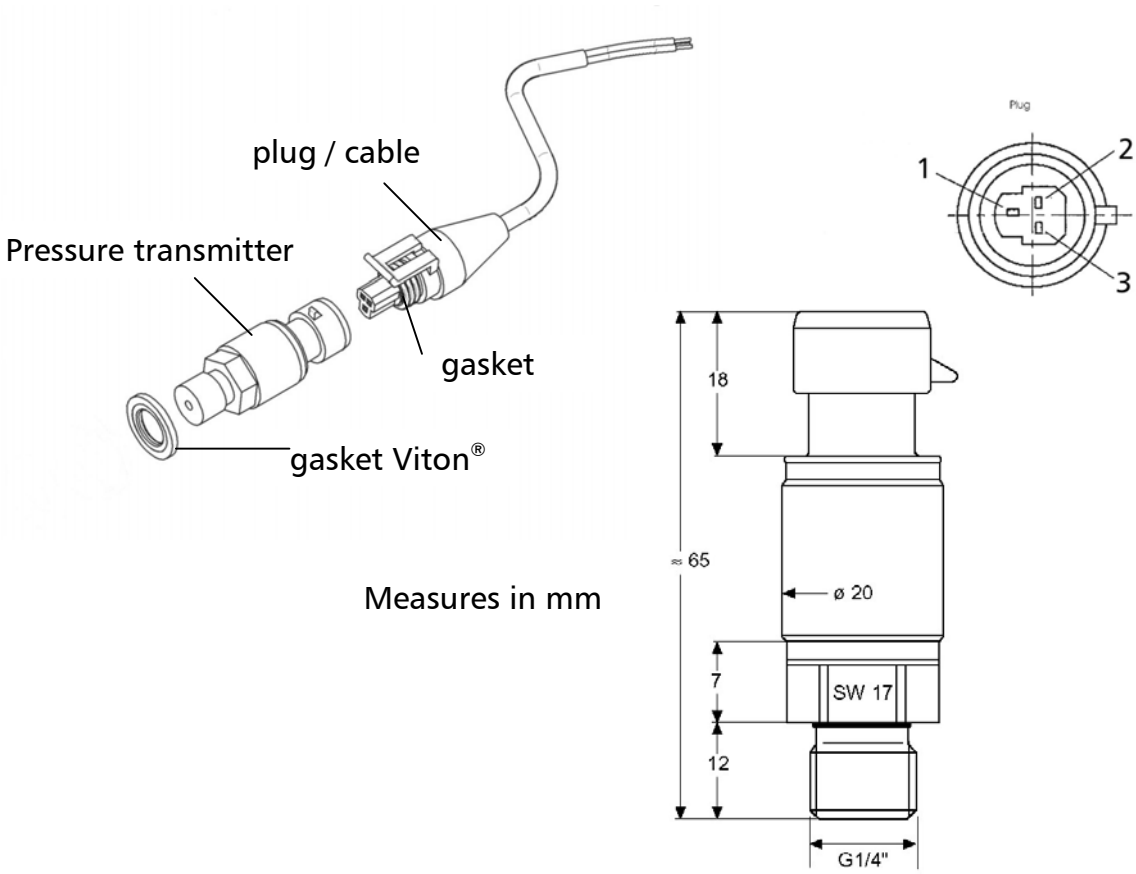


Measures in mm

***Note:*** **To guarantee the protection class IP67, the rubber gasket has to be mounted between the pressure transducer and the plug!**

# 4 Control Terminals and Display unit

All externally used cables have to be shielded. Do not connect the ground of the electronic components to other potentials (all electronic ground and GND of the RS 485-interface are connected together internally).
For external on/off switches, (terminals X1/4 – X1/5) contacts, which are suitable for switching low voltages <10 VDC, are necessary.
**If unshielded control cables are used, signal interference may occur and interfere with the function of the controller.**

| | | | |
|---|---|---|---|
| ***Terminals:*** | X1/ | 1 | GND |
| | | 2 | Actual value input 4...20mA, 50 Ohm internal load resistance |
| | | 3 | Power supply for external transducer; 15VDC, max. 100mA |
| | | 4 | GND |
| | | 5 | 5 VDC for external on/off (release); Ri=10kOhm, (gold plated contact necessary!) |
| | | 6 | GND |
| | | 7 | 5 VDC for external low water protection; Ri=10kOhm, (e.g. incoming pressure switch or water level switch) |
| | | 8 | Thermal switch or PTC (in motor terminal box) |
| | | 9 | Thermal switch or PTC |
| | | 10 | GND |
| | | 11 | Analogue output 2; 0...10 VDC (see chapter 7.25) |
| | | 12 | Current signal input 4...20mA |
| | | 13 | Voltage signal input 0...10V or 2...10V |
| | | 14 | Digital input for activating of 2nd required value |

| | | | | | | |
|---|---|---|---|---|---|---|
| ***Terminal:*** (for dry Contacts) | X2/ | 1 | Fault signal relay | NC | max. 250VAC | 1A free of inductivity |
| | | 2 | Fault signal relay | CC | max. 250VAC | 1A free of inductivity |
| | | 3 | Fault signal relay | NO | max. 250VAC | 1A free of inductivity |
| | | 4 | Pump operation signal relay | NC | max. 250VAC | 1A free of inductivity |
| | | 5 | Pump operation signal relay | CC | max. 250VAC | 1A free of inductivity |
| | | 6 | Pump operation signal relay | NO | max. 250VAC | 1A free of inductivity |

***!! Fault relay (X2/2 - X2/3) is closed, when there is no error!!***

***Terminal:*** X3 Display

| | | | | | |
|---|---|---|---|---|---|
| ***Terminal:*** | X5-6/ | 1 | RS 485 | SIO - | LOW |
| | | 2 | RS 485 | SIO + | HIGH |
| | | 3 | RS 485 | GND | |
| | | 4 | RS 485 | + 5 VDC | max. 20mA out For supply of external interface converter |

***Terminal:*** X8 RS 485

***Terminal:*** X9/1 24 VAC or DC+ Supply Voltage
2 24 VAC or GND Supply Voltage
3 Error relay of the connected VFD
4 Error relay of the connected VFD
5 Analogue output for the speed signal of the VFD (0-10V DC)
6 GND

## 4.1 Terminals of the HYDROVAR-*Smart*

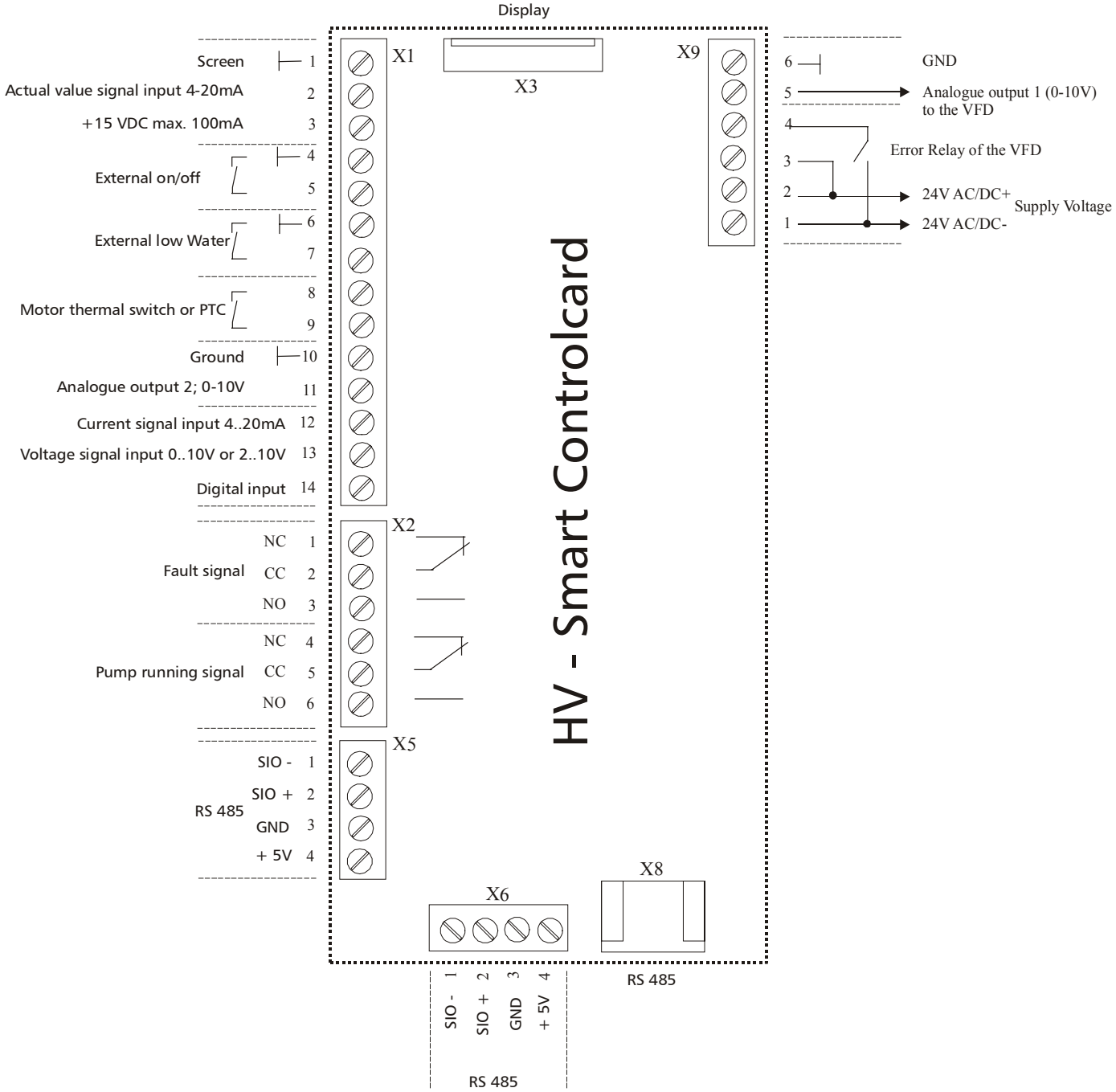


When connecting more variable speed drives (max. 4 pumps) via the interface RS 485, the terminals X5/1/2/3 or X6/1/2/3 of each Hydrovar-*Smart* have to be connected together by using a shielded cable and have to be programmed accordingly (see chapter 7.21).

### 4.2 Display unit

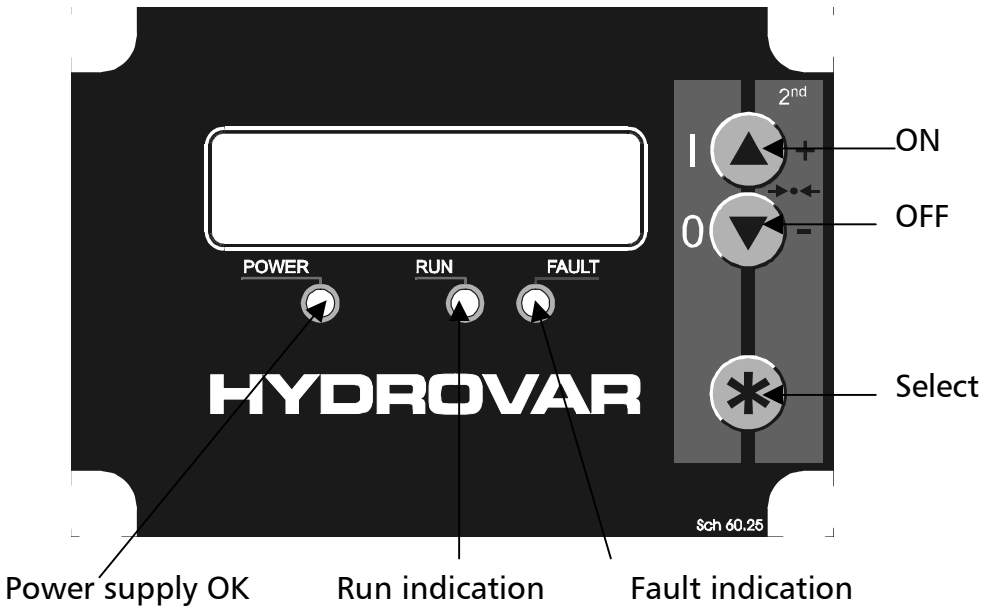


## 5 Language Selection

The information on the display can be called up in German, English, Italian, French, Spanish, Portuguese or Dutch.

To select the required language proceed as follows:

Briefly press ✱ and ▲ simultaneously (in 1st display);
⇒ the actual language will now appear in the second line and the desired language can be selected with the buttons ▲ or ▼. After the language has been selected, press ✱ briefly and the 1st display of the main menu will appear again.

If only the language is changed it is not necessary to SAVE.

# 6 Parameters of the main menu

After connection of the Hydrovar-*Smart* unit to the power supply the following displays become visible.

| | |
|---|---|
| SW-Ver: HV00-001<br>Date: xxxx | The current software version with the date of programming is displayed for about 3s. |

The following two displays are depending on the selected mode:

**a) Active MODE = Controller:**

1. | | |
|---|---|
| ITT INDUSTRIES<br>XX.X BAR | This window is mentioned several times in the Operating Instructions as 1st display at Mode Controller |

Continue by pressing the ⊠-button

2. | | |
|---|---|
| REQUIRED VALUE 1<br>X.XX BAR | Set the desired set pressure with either ▲ or ▼ and then briefly press the ⊠-button. |

If several pumps are connected via the RS-485 interface, one pump must be ready for operation when the set pressure is changed, otherwise the set value will not be accepted by the follow-up pumps. Afterwards the new required pressure has to be saved in all pumps.

**If you want to change to Required Value 2 you have to close the external contact, connected to X1/10-X1/14.**

After closing this contact, the display changes from Required value 1 to

2.1 | | |
|---|---|
| REQUIRED VALUE 2<br>ADC-X XX.X BAR | In this window, there is shown the condition of the second Required value. |

**ADC-X:** This parameter shows the source of the external or internal value (see chapter 7.18).
**XX.X Bar:** shows the actual value of the Required Value 2.

Continue by pressing the ⊠-button (to point 3)

**b) Active MODE = Actuator:**

1. | ITT INDUSTRIES<br>Frequency XX.X Hz |

This window is mentioned several times in the Operating Instructions as 1st display at the Mode Actuator.

Continue by pressing the ⊠-button

2. | REQUIRED VALUE 1<br>X.XX BAR |

Not active in the actuator mode, because the internal controller is not active.

Continue by pressing the ⊠-button (to point 3)

**c) Active MODE = Synch. Controller or Multicontroller:**

1. | ADR (X) P X<br>XX.X Bar |

This window is mentioned several times in the Operating Instructions as 1st display in the Synch. Controller or Multicontroller mode.

Continue by pressing the ⊠-button

2. | REQUIRED VALUE 1<br>X.XX BAR |

Set the desired set pressure with either ▲ or ▼ and then briefly press the ⊠-button.

If several pumps are connected via the RS-485 interface, one pump must be ready for operation when the set pressure is changed, otherwise the set value will not be accepted by the follow-up pumps. Afterwards the new required pressure has to be saved in all pumps.

**If you want to change to Required Value 2 you have to close the external contact, connected to X1/10-X1/14.**

After closing this contact, the display changes from Required value 1 to

2.1 | REQUIRED VALUE 2<br>ADC-X XX.X BAR |

In this window, there is shown the condition of the second Required value.

**ADC-X:** This parameter shows the source of the external or internal value (see chapter 7.18).

**XX.X Bar:** shows the actual value of the Required Value 2.

Continue by pressing the ⊠-button (to point 3)

**d) Active MODE = Actuator local:**

1. | ITT INDUSTRIES<br>Frequency XX.X Hz |

This window is mentioned several times in the Operating Instructions as 1st display at the Mode Actuator local.

Continue by pressing the ⊠-button

2. | ACTUATOR LOCAL<br>X.X Hz X.XX BAR |

Set the desired output frequency with either ▲ or ▼ and then briefly press the ⊠ button.

If several pumps are connected via the RS-485 interface, you have to set this parameter on each pump!

**Press the ⊠ button on the Hydrovar-*Smart* to change to**

**!! The following displays of the main menu are valid for all selected Modes !!**

3. | AUTO - START<br>ON |

Select (ON) with the ▲ button or (OFF) with ▼.

*AUTO-START* ON starts the pump automatically after a failure of the power supply. If *AUTO-START* is OFF, the Hydrovar-*Smart* has to be restarted by pressing the buttons ▼ (OFF) and then ▲ (ON) after a power supply failure.

If the AUTO-START is OFF, the unit will not start again in cases of a power supply failure or disconnection. After restarting the following message is shown:

3.1 | NO AUTOSTART<br>disable inverter |

To restart the unit, press at first the ▼ and then the ▲ button for the start.

**Press ⊠ and the display changes to**

| **Note:** All errors are only readable in English language |

4. | E R R O R 1<br>..... |

Here, there is shown the last error

**Press the ⊠ button to change to**

5. | E R R O R 2<br>..... |

Shows the error before the last error

**Press the ⊠ button to change to**

6. | E R R O R 3<br>..... |

Shows the error before error 2

**Press the ⊠ button to change to**

7. | E R R O R 4<br>..... |

Shows the error before error 3

**Press the ⊠ button to change to**

| | | |
|---|---|---|
| 8. | E R R O R 5<br>..... | Shows the error before error 4 |

**Press the ⊠ button to change to**

| | | |
|---|---|---|
| 9. | TOTAL RUN TIME<br>0000:00 | Runtime of the motor.<br>This time can be reset together with the Operating hours (see chapter 7.30). |

**Press the ⊠ button to change to**

**Note: All changes have to be saved, that they will not be lost in case of shut off of the power supply !!**

| | | |
|---|---|---|
| 10. | SAVE ???<br>▲ + ▼ | Simultaneously press buttons ▲ and ▼ until...: |
| 11. | SAVE ???<br>SAVED | appears on the display. After five seconds the display jumps back to the 1st display. |

These parameters can also be set during operation; To do so, briefly press the button ⊠ and repeat steps 1 – 10.

**Note: Often shown displays:**

| | | |
|---|---|---|
| 12. | INVERTER LOCKED<br>enable inverter | This message appears when the connection of terminal X1/4-X1/5 is open (external release contact). |

To start the Hydrovar-Smart, connect these terminals by closing the external release contact or by using a short-circuit connection!

# 7 Settings in the Secondary Menu

**Important!** Before entering the secondary menu, these instructions have to be read carefully to prevent incorrect settings which could cause malfunction.

## Secondary Menu:

Stop motor by pressing ▼ (OFF)

| INVERTER STOP<br>ON -> START |
|---|

Press ✱ for 3 seconds to change to

| PASSWORD<br>0000 |
|---|

Set 'Password 0066' by pressing ▲

| PASSWORD<br>0066 |
|---|

**Note: The password must be entered at each entry!**

Confirm by pressing ✱ and the first window of the sub menu is shown

| J O G – MODE<br>0.0Hz X.XX Bar |
|---|

**In the following paragraphs all possible settings are listed (in the display, there is shown the European default setting).**

### 7.1 JOG-MODE

**Display and Manual Operation Mode**

| J O G – MODE<br>0.0Hz X.XX Bar |
|---|

Actual outgoing frequency and actual analogue input are shown. By pressing ▲ or ▼ in this menu, the internal controller of the Hydrovar-*Smart* will be shut off and the inverter changes to manual mode. With the buttons ▲ and ▼ you can set any constant speed. Setting of 0,0 Hz stops the inverter. If the JOG-MODE is left at a frequency higher than 0,0 Hz the inverter will continue its normal automatic operation.

**Press ✱ on the Hydrovar-*Smart* to change to**

### 7.2 Window - %

| WINDOW<br>5% |
|---|

This value indicates the max. variation of the outgoing pressure (see diagram "Ramp window" in chapter 7.7). Possible setting: between 0% - 100% of required value.

**Press ✱ on the Hydrovar-*Smart* to change to**

### 7.3 Ramp Hysteresis

| RAMP HYSTERESIS<br>80% |
|---|

Level, where the fast ramps are changing to the slow ramps (see diagram "Ramp window" in chapter 7.7)

Possible setting: between 0%..100% of the window

**Press ⊠ on the Hydrovar-*Smart* to change to**

### 7.4 Ramp 1: Fast running up time:

Time setting at Ramp 1, 2, 3, or 4 will influence the control of the pump and MUST NOT BE CHANGED at normal operation. Possible setting of each ramp 0,05 - 1000 sec.

Please take care, that the ramp times of the connected VFD are every time faster than the settings of the ramps 1-4 of the HYDROVAR-*Smart*!

The fast ramp times 1 and 2 are determined by the power of the connected drive. (Standard settings = 4-15s, depending on the power)

| RAMP 1<br>4.0 Sec |
|---|

Excessively fast running up time may overload the inverter in the starting moment.

Excessively slow running up time may cause a break down of the outgoing pressure during operation.

**Press ⊠ on the Hydrovar-*Smart* to change to**

### 7.5 Ramp 2: Fast running down time:

| RAMP 2<br>4.0 Sec |
|---|

Excessively fast running down time tends to cause oscillation or hunting or can cause an error (OVERVOLTAGE) during ramp down of the pump.

Excessively slow running down time tends to generate over pressure.

**Press ⊠ on the Hydrovar-*Smart* to change to**

### 7.6 Ramp 3: Slow running up time:

The following ramps 3 and 4 determine the speed of the internal Hydrovar-*Smart* controller and depend on the system, which should be controlled.

| RAMP 3<br>70 Sec |
|---|

A too slow running up time can cause a break of the outgoing pressure during variation of the demand.

A too fast running up time may lead to oscillation and/or overload of the inverter.

**Press ⊠ on the Hydrovar-*Smart* to change to**

### 7.7 Ramp 4: Slow running down time:

| RAMP 4<br>70 Sec |
|---|

A too fast setting leads to oscillation
A too slow setting delays the switching off too much

Diagram: Ramp – Window

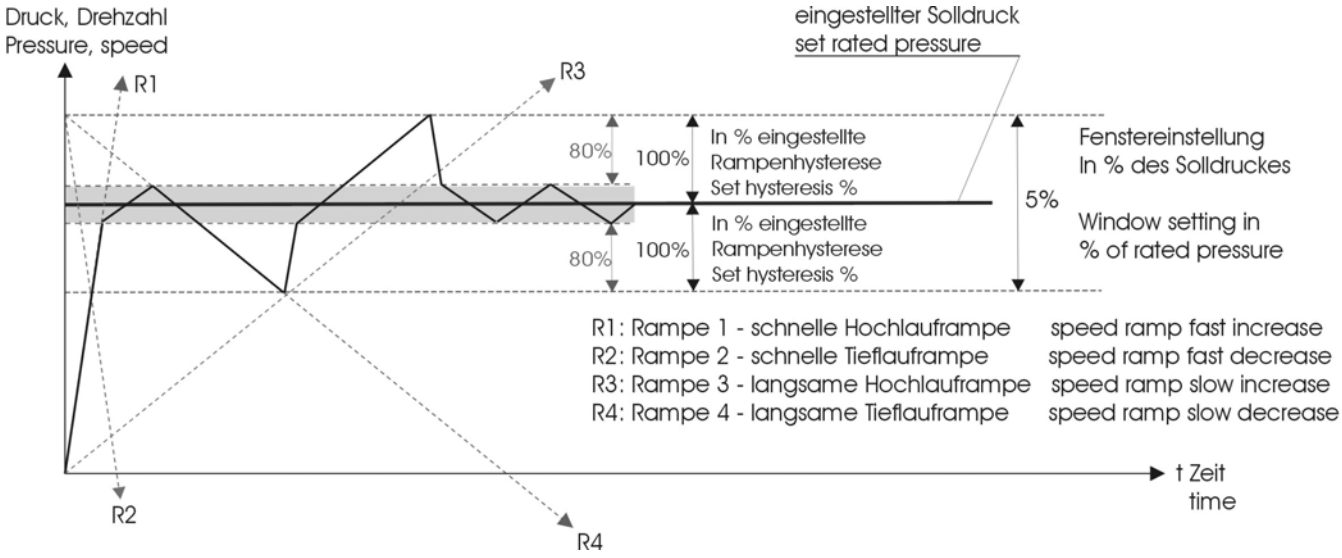


**Press ⊠ on the Hydrovar-*Smart* to change to**

### 7.8 Maximum Frequency

| MAX. FREQUENCY<br>50.0 Hz |
|---|

Possible setting between 40 and 70 Hz.

The Hydrovar-*Smart* gives an analogue output signal of 0-10VDC as a speed signal, which is connected to the frequency drive, where 0V corresponds to 0Hz and 10VDC corresponds to the maximum frequency.
It is important that this values correspond with the values of the inverter.

**Note: The setting of the Maximum frequency in the HYDROVAR-Smart has to be the same than in the connected VFD!**

**Press ⊠ on the Hydrovar-*Smart* to change to**

### 7.9 Minimum Frequency

| MIN. FREQUENCY<br>0.0 Hz |
|---|

Here you can set the minimum frequency between 0,0 and the Maximum frequency.

**Attention!**: If there is set f>fmin in the parameter CONFIG. FMIN (see next chapter) the pump will not stop in the normal mode. It will keep running with the set minimum frequency.
**!! Possibility of overheating of the pump !!**

**Press ⊠ on the Hydrovar-*Smart* to change to**

### 7.10 Operation at the minimum frequency

| CONFIG FMIN<br>f => fmin |
|---|

If you have selected „f->0“ the frequency will go down to the selected minimum frequency.
Then the inverter will keep running for the selected stop-delay time and after this time the Hydrovar-*Smart* will stop automatically.

If the selection is „f->$f_{min}$“ you can not run the pump below the set minimum frequency. In the controller, actuator and multi controller mode the pump will never run below the set minimum frequency (the pump will only stop with an external on/off-(terminals X1/4 and X1/5) or in case of a failure.

**Press ⊠ on the Hydrovar-*Smart* to change to**

### 7.11 Delay time for shut off at minimum frequency

| STOP-DELAY FMIN<br>5 s |
|---|

After running the pump for this selected time at minimum frequency, the pump will stop, if parameter CONFIG. FMIN (see chapter 11.10) is set to f ⇒ 0
Adjustable between 0 and 100s.

**Press ⊠ on the Hydrovar-*Smart* to change to**

### 7.12 Sensor – Adjust

| SENSOR_ADJUST?<br>Out of range |
|---|

***Zero point adjustment of the transmitter***
Depressurise the system and press buttons ▲ + ▼ simultaneously. After a successive adjustment, "adjusted" appears on the display.
If “out of range” is shown on the display, no adjustment is possible

**Press ⊠ on the Hydrovar-*Smart* to change to**

### 7.13 Sensor - Curve

| SENSOR-CURVE<br>Linear |
|---|

Function of the input signal (4...20mA) of the Hydrovar to the actual measured value.

**Application:**
*linear:* Pressure control, differential pressure control, level, temperature and flow control (inductive or mechanical).
*quadratic:* Flow control by using an orifice plate together with a differential pressure transmitter.

**Press ⊠ on the Hydrovar-*Smart* to change to**

### 7.14 Setting of the sensor range

| SENSOR RANGE<br>20mA = 10.0Bar |
|---|

Setting of the maximum value of the measuring transmitter, which corresponds to
20mAe.g. 10.0 bar = 20mA of the pressure transmitter

Adjustable ranges: Bar: 0.2...100 bar; psi 2.9...1450psi;
m3/h: 4...2400m3/h; g/min: 9...10560g/min
mH2O: max 1019,5mH2O; ft: max 3345ft
0...100 %; or without unit: max 1000;

**Press ⊠ on the Hydrovar-*Smart* to change to**

### 7.15 Operation Mode

| MODE:<br>Controller |
|---|

Select your required Mode by using the ▲ and ▼ buttons

If only one HYDROVAR-*Smart* pump is in operation set the **Controller**. If more than one pump work together via the RS485 interface (follow-up pump control), the **Multicontroller** must be set with the buttons ▲ or ▼.

**Synch. Controller:**
The **Synchronous Controller** mode is working in the same way like the Multicontroller. The only difference is, that all pumps in a multipump system are running at the same frequency.
**Actuator:**
The **Actuator** application is only used if you have another external controller. Then the internal controller is shut off, and the output frequency is proportional to the input signal (X1/2) ⇒ 4-20 mA = 0 - $f_{max}$. The outgoing signal changes with the programmed ramps 1 and 2. The functions of low water, thermal protection and external ON/OFF are still working.

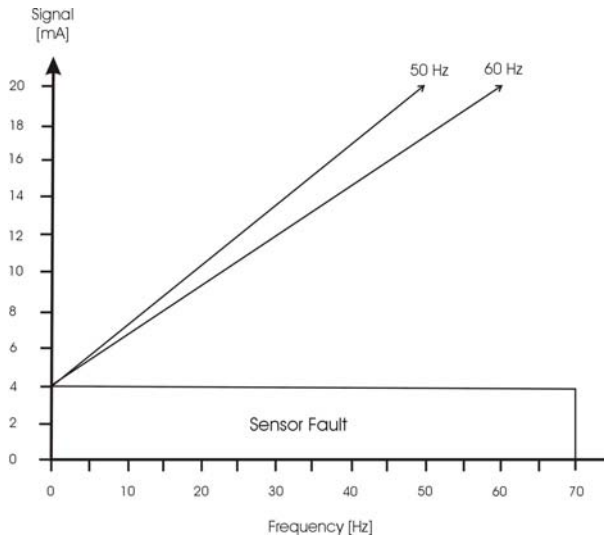

If **MANUAL CONTROL** is selected, the parameter *REQUIRED VALUE* will change to MANUAL CONTROL in the main menu, where the actual frequency and the actual value is displayed (according to the *JOG-MODE* in the submenu).
Now the frequency can be changed with the ▲ and ▼ buttons, and the speed of the pump will change with the fasten ramps. After selecting the right frequency, it can be saved with the standard *SAVE.*
After a supply failure, the pump will then run with this selected frequency (depending on the parameter *AUTO-START,* see chapter 6.d.3).
The frequency can be changed between the set minimum and maximum frequency.

In the 1st display, there is shown the actual frequency.

| | |
|---|---|
| **NOTE:** | CONFIG. FMIN (see chapter 7.10) will not work in this mode. |

| | |
|---|---|
| **Attention** | Driving the pump in a not allowed speed range can damage the motor or the inverter! |

**Press ⊠ on the Hydrovar-*Smart* to change to**

### 7.16 Control Response

| |
|---|
| REGULATION MODE<br>Normal |

**Normal:** Speed is increased with falling actual value signals. (e.g.: Control at constant output pressure).
**Inverse:** Speed is reduced with falling actual value signal, (e.g.: Control at constant suction pressure or at constant level).

**Press ⊠ on the Hydrovar-*Smart* to change to**

### 7.17 Start Value

| |
|---|
| START VALUE<br>disabled |

This parameter gives you the start value after pump stop in percentage of the required value (adjustable between disabled and sensor range).

Example:
*required value:* 5,0 bar
*start value:* 2,5 bar
If the pump system have reached the required pressure from 5.0 Bar and there is no more consumption, the Hydrovar-*Smart* shuts off the pump. When the consumption increases and the pressure goes down the pump will normally start. If you have selected the START VALUE at 2,5 bar the pump will start again at this selected pressure.

**Press ⊠ on the Hydrovar-*Smart* to change to**

### 7.18 2nd Required Value

| CONFIG. REQ. VAL.2<br>OFF |
|---|

With this parameter CONFIG. REQ. VAL.2 you can select a independent 2nd required value.

The change between 1st and the 2nd required value can be done over the digital input, terminal X1/14 on the control card. If this input is connected to Ground, 2nd required value active.

Possible settings:

**OFF**: actual value 2 is not active (no change after closing the input X1/14)

**INT**: internal required value 2, function and setting according to existing required value.

**EXT ADC-I**: the required value 2 is made from the value of the current signal (4-20mA) at the terminals X1/12, X1/10. 20mA is equal to the programmed SENSOR RANGE. If the incoming current signal is below 4mA, there will be shown an error message on the display, but no failure is indicated *(failure relay is not closed).* In this case the required value 2 will be 0.

**EXT ADC-U 0-10V:** the required value 2 is made from the value of the voltage signal of 0-10VDC at the terminals X1/13, X1/10 (Ground)

**EXT ADC-U 2-10V:**). the required value 2 is made from the value of the voltage signal of 2-10VDC at the terminals X1/13, X1/10 (Ground)

Example for connection of an external 4-20mA signal for the 2nd required value:

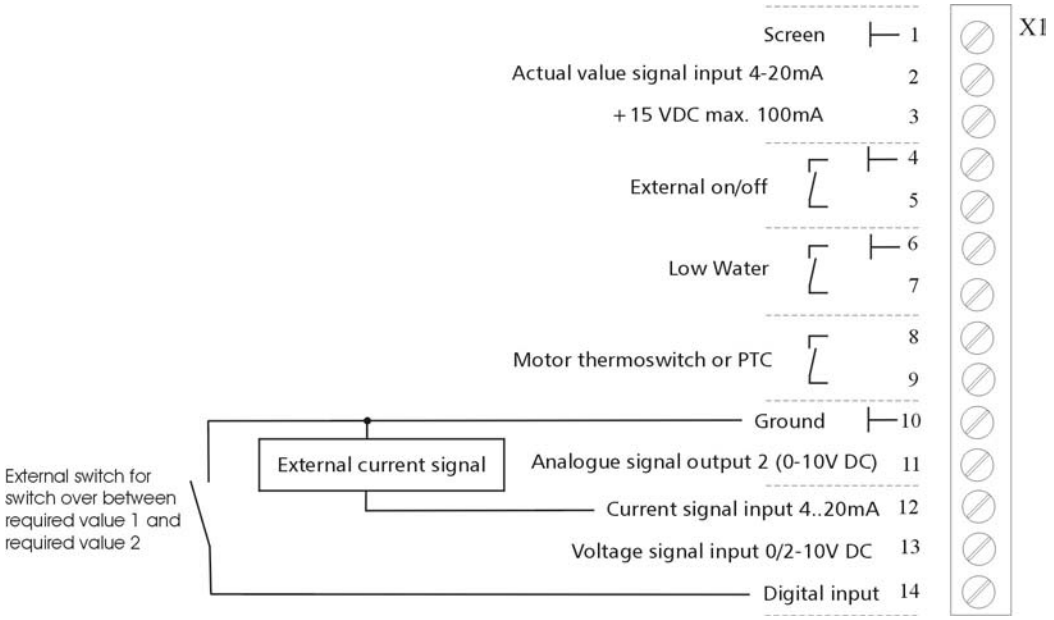


Setting the required value2:

The active required value is shown in the actual display of the parameter required value. When the 2nd required value is active (digital input, terminal X1/14, closed), in the first line, there is shown Required value 2. The second line will show the source of the 2nd value, which is selected in the parameter *CONFIG. REQ VAL:2* (INT, EXT-ADC-I or EXT-ADC-U) and also the actual value of this input.

INT : you can select your value with the ▲ and ▼ buttons

EXT: only display of the value of the 2nd analogue input signal.

In case of saving, every time both required values are saved.

Press ⊠ on the Hydrovar-*Smart* to change to

### 7.19 Configuration of 1st relay

| RELAY CONFIG.<br>Run Motor |
|---|

Selection possible with buttons ▲ and ▼.

**Simple Multicontr.** ⇒ allows to start/stop a constant speed pump
**Run Motor** ⇒ motor run indication (over the relay)

If you have selected Simple Multicontr. two parameters will have new functions. The start level of the slave pump you enter at the parameter Enable Seg. Ctl. (see chapter 7.21.3), and the stop value in the parameter Synchron. Limit (see chapter 7.21.6).
e.g. if the speed controlled pump reaches the start level, the relay will be switched on, and will be switched off, when the output frequency falls below the stop level.

Press ⊠ on the Hydrovar-*Smart* to change to

### 7.20 Submenu Offset

| S U B M E N U<br>Offset |
|---|

Press ⊠ for about 3 seconds to enter the submenu and the display changes to

#### 7.20.1 Source of the Offset input

| OFFSET INPUT<br>Off |
|---|

The second additional input can be used as required value 2 (see chapter 7.18) and also for an Offset of the 1st required value.

(An example is shown in chapter 7.20.6)

**OFF** : Offset deactivated
**EXT ADC-I** : Offset will be calculated according to the current input (4-20mA) at the terminals X1/12 (X1/10=Ground).

**Note:** If the incoming current signal is below 4mA, there will be an error message on the display, but no failure is shown *(failure relay is not closed).* In this case the *OFFSET INPUT* works like external signal=0.

**EXT ADC-U 0-10V**: Offset will be calculated according to the voltage input of 0-10VDC at terminals X1/13 (X1/10=Ground)
**EXT ADC-U 2-10V**: Offset will be calculated according to the voltage input of 2-10VDC at terminals X1/13 (X1/10=Ground)

Press ⊠ on the Hydrovar-*Smart* to change to

### 7.20.2 1st Offset level

| |
|---|
| LEVEL 1<br>XX.X % |

The level 1 is the start level of the 1st Offset. (adjustable between 0 and 100% of the additional analogue input).

Press ⊠ on the Hydrovar-*Smart* to change to

### 7.20.3 2nd Offset level

| |
|---|
| LEVEL 2<br>XX.X % |

The level 2 is the start level of the 2nd Offset. (adjustable between 0 and 100% of the additional analogue input).

Press ⊠ on the Hydrovar-*Smart* to change to

### 7.20.4 INTENSITY 1

| |
|---|
| INTENSITY 1<br>+XX.X % |

This is the intensity of the 1st Offset of the required value at the zero point of the second analogue input
Settings: -200% up to +200% of the sensor range.

Press ⊠ on the Hydrovar-*Smart* to change to

### 7.20.5 INTENSITY 2

| |
|---|
| INTENSITY 2<br>+XX.X % |

This is the intensity of the 2nd Offset of the required value at the maximum point of the second analogue input.
Settings: -200% up to +200% of the sensor range.

**To leave the submenu press the ⊠ longer than 3 sec. to change to**

| |
|---|
| S U B M E N U<br>Offset |

### 7.20.6 Example for the Offset:

| | |
|---|---|
| *Sensor range:* | 20mA ≙ 10 bar |
| *Required value:* | 5 bar |

| | |
|---|---|
| Level 1: | 20% of the 2nd additional input |
| Level 2: | 80% of the 2nd additional input |
| Intensity 1: | -10% ≙ −1 bar (refer to the required value) |
| Intensity 2: | +30% ≙ +3 bar (refer to the required value) |

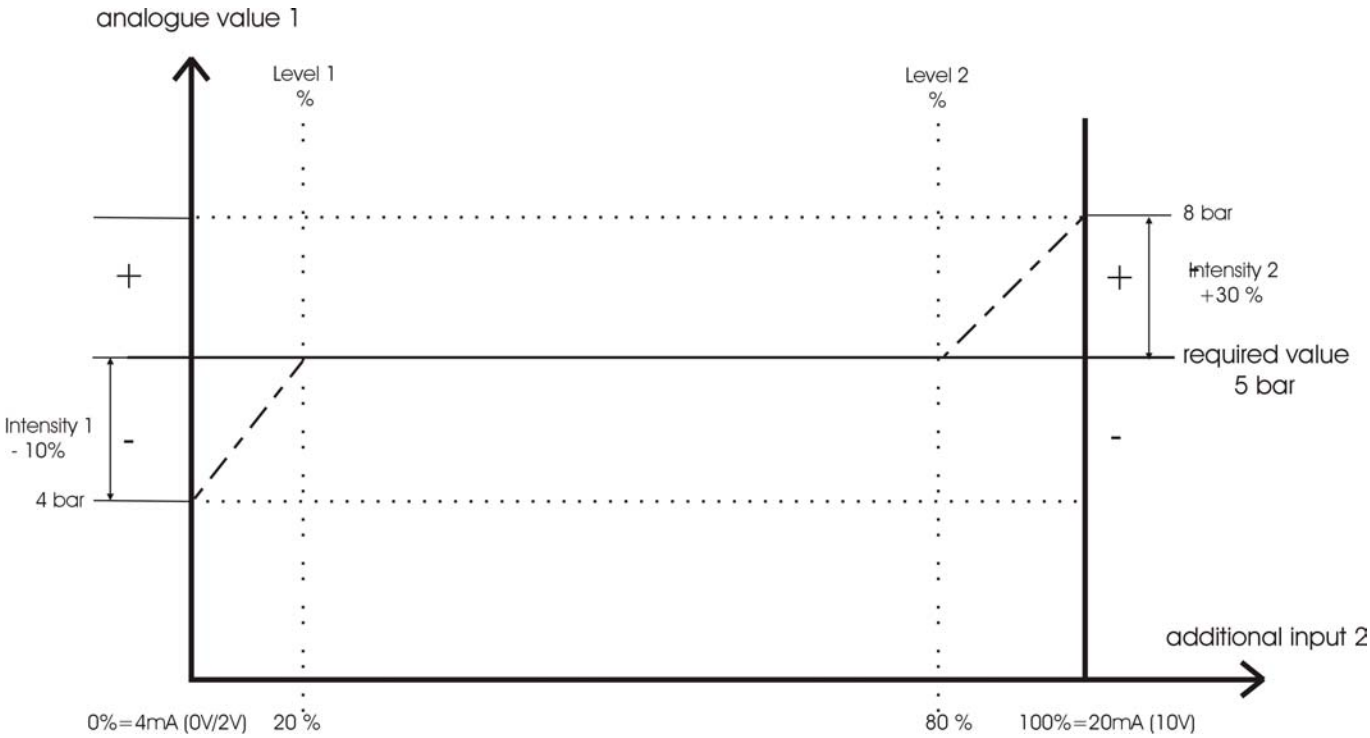


The *Level 1* have to be entered on the axis of the "additional input" in percent of this *Second Additional* input (=20%). Also proceed with the second level (80%).

*Intensity 1 and 2* are depending on the *Sensor range* of the actual value signal.
The offset of *Intensity 1* is valid till *Level 1*. After reaching *Level 1* the *Required Value* has no offset. Therefore you have to enter the Intensity 1 at the 0%-axis to fine the right offset value. The *Required Value* is valid till you reach the *Level 2.* After reaching *Level 2*, the new value, is influenced by the offset of *Intensity 2*. To get the right offset after *Level 2*, you have to enter the *Intensity 2* at the 100%-axis of the additional input.

Press ⊠ on the Hydrovar-*Smart* to change to

## 7.21 Submenu Sequence control

| S U B M E N U<br>Seq. Control |
|---|

**Programming of the Multipump Operation:**
Up to four pumps can be connected using the integrated RS-485 interface, by connecting the terminals /1, /2 and /3 of the terminal blocks X5 or X6 of each pump together). However, the following additional programming must be carried out in the submenu:

Press ⊠ for about 3 seconds to enter the submenu and the display changes to

### 7.21.1 Lift Value

| ACTU. VALUE INC.<br>0.35 Bar | Adjustable between 0.0 to the pre-selected *Sensor range* |
|---|---|

*Operation of the start of the slave pump:*

1) Pump 1 reaches ENABLE SEQ. CONTROL (maximum speed)
2) Pressure falls and reaches the start-value of the 2nd pump (= REQUIRED VALUE – ACTU. VALUE DEC.)
3) Pump 2 is switched on automatically
4) The required value is calculated new, after the start of the 2nd pump in the following way!

*New required value* = REQUIRED VALUE – ACTU. VALUE DEC. + ACU. VALUE INC.

Generally:

k ... Number of active pumps (k >1)

$p = p_{set} + (k-1)*[\text{lift value} - \text{fall value}]$

- Lift value = Fall value ⇒ **Pressure constant** when pumps switch on
- Lift value > Fall value ⇒ **Pressure rises** when lag-pump switches on
- Lift value < Fall value ⇒ **Pressure falls** when lag-pump switches on

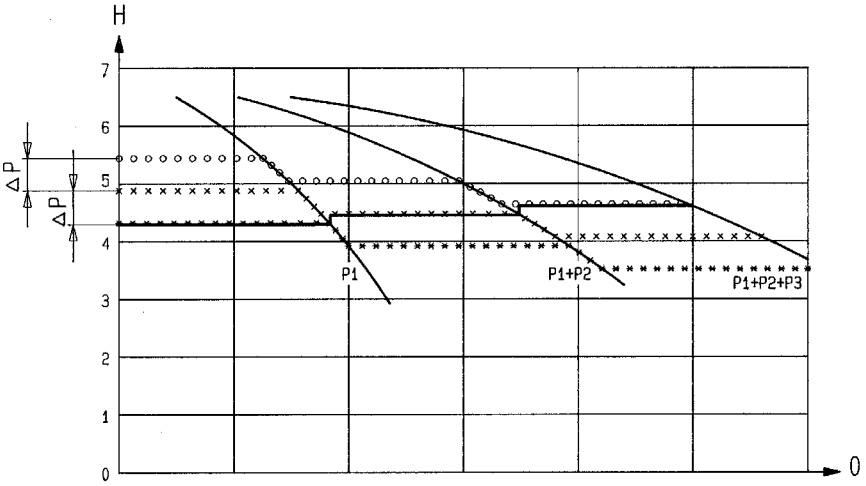

Press ⊠ on the Hydrovar-*Smart* to change to

### 7.21.2 Fall Value

*For calculation of the set pressure after start of pumps 2 to 4*

| ACTU. VALUE DEC.<br>0.15 BAR |
|---|

Adjustable from 0,0 to pre-selected *Sensor range* determines the start-value of the 2nd pump and the other following pumps.
(*Start-Value* = REQUIRED VALUE –ACT. VALUE DEC.)

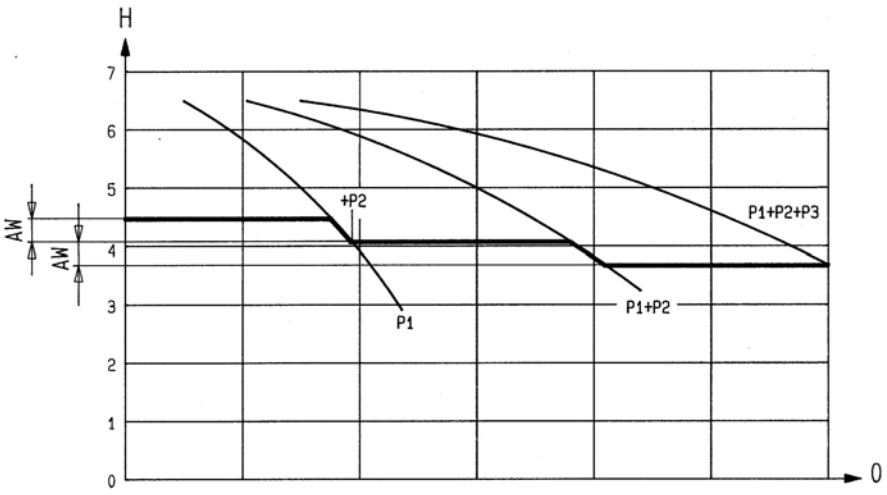


Press ⊠ on the Hydrovar-*Smart* to change to

### 7.21.3 Release frequency of the following controller

| ENABLE SEQ. CTL.<br>48.0 Hz |
|---|

Release of the follow-up pump only when the start-value (see chapter 7.21.2) is reached <u>and</u> the lead Pump has reached the programmed frequency (Adjustable from 0.0 Hz to 70 Hz)
If you do not want to start a following pump this value has to be set higher than the maximum frequency.
This parameter is also used to start a constant speed pump (see chapter 7.19), when Simple Multicontr. is set). When this frequency level is reached, the potential free contact of the relay X2/5 – X2/6 will be closed.

Press ⊠ on the Hydrovar-*Smart* to change to

### 7.21.4 Switch Interval

| SWITCH INTERVAL<br>12 hours |
|---|

For changing the master pump and follow-up pump in order to achieve even operating hours of the pumps

Adjustable between 1 hour and 100 hours. If it is set higher than 100 hours, the automatic changeover is deactivated).
Manual change of master pump in the 1st display with the ▲-button.

Press ⊠ on the Hydrovar-*Smart* to change to

### 7.21.5 Source of required value

| SOURCE REQ. VALUE<br>OFF |
|---|

for selecting the pump address of the source of the required value.

Five settings are possible:
OFF, ADR1,ADR2, ADR3 and ADR4. If an additional input (INT or EXT-ADC-I or EXT-ADC-U) is active, you must select the address where this input is connected. When Multicontroller or Synch. Controller is active, the actual active value is shown in brackets in the middle of the display. If the sign "#" is shown in the second line of the display, the pump will work with a required value from another pump in the multipump system. On the pump, which is the source of the required value, there is no "#" shown.

Press ⊠ on the Hydrovar-*Smart* to change to

### 7.21.6 Synchronous Control

If the synchronous control is active the activated pumps try to control the set pressure together (all pumps run at the same frequency). The 2nd pump starts, when the 1st pump reaches the release frequency(ENABLE SEQ: CONTR:, see chapter 7.21.3) The pumps will now maintain constant pressure by running synchronously. The follow-up pump will stop, when both pumps together run below the set SYNCHRON. LIMIT. This creates the hysteresis effect.

| S U B M E N U<br>Synch. Control |
|---|

Press ⊠ for about 3 seconds to enter the submenu and the display changes to

#### 7.21.6.1 Synchronous Limit

| SYNCHRON. LIMIT<br>0,0 Hz |
|---|

Frequency threshold adjustable between 0,0 Hz and the set maximum frequency.

Switch off threshold of the first follow-up pump. The switch off thresholds of the other pumps are each higher by the SYNCHRON-WINDOW.

This parameter is also used for the stop value for the external constant speed pump at activated Simple Multicontroller in the parameter configuration relay. (see chapter 7.19).

Press ⊠ on the Hydrovar-*Smart* to change to

#### 7.21.6.2 Synchronous Window

| SYNCHRON-WINDOW<br>2.0 Hz | Frequency offset<br>Adjustable between 0...10 Hz |
|---|---|

Threshold lift for switching off the 3rd and 4th follow-up pump.

**Setting the Synchronous Limit:**

1. Set the desired set value and close the outgoing valves for no flow.
2. Start the first pump in JOG Mode (1st Window in the submenu), increase the frequency, till you reach the required value. Read the frequency ( = $f_0$ )
3. Set the synchronous threshold ($f_0$ + 2-3 Hz)
4. Set the synchronous offset to 1-2 Hz (depending on the pump curve and operating point).

To leave the submenu press the ⊠ longer than 3 sec. to change to

| S U B M E N U<br>Synch. Control |
|---|

Press ⊠ on the Hydrovar-*Smart* to change to

### 7.21.7 Pump status indication

| PUMP – SEQUENCY<br>Adr1 disabled | Shows the status of the individual drives<br>- for follow-up pump switching |
|---|---|

- settings from address 1 to 4, (address 5 is reserved for external control devices)
- Information concerning the actual sequential status of each pump.

The following diagnosis parameters can be also be read in this display window:

| | |
|---|---|
| hold Px | Pump is stopped (control released) |
| run Px | Pump is running (control released) |
| stop Px | Pump is stopped, because f< start frequency of the previous pump |
| Disabled | Hydrovar-*Smart* not ready to start (no release) |
| Error | Hydrovar-*Smart* error |
| Fault | Polling failure (RS-485)<br>(interface connection wrong or not connected) |
| Detected | Polling successful (RS-485) |
| AdrX * | "*" -> Address of the pump that is being read |

Press ⊠ on the Hydrovar-*Smart* to change to

### 7.21.8 Error Signals for Data Bus Interruptions

| BUSARBIT-DIAG.<br>0 | Counts the number of fault synchronising attempts over the RS-485 interface. |
|---|---|

Is there an indication >100, the RS485 interface connection has to be checked!

To leave the submenu press the ⊠ longer than 3 sec. to change to

| S U B M E N U<br>Seq. Control |
|---|

Press ⊠ on the Hydrovar-*Smart* to change to

## 7.22 Submenu - RS 485 Interface

| S U B M E N U<br>RS 485-Interface | Press ⊠ for about 3 seconds to enter the submenu and the display changes to |
|---|---|

### 7.22.1 Pump Address

| PUMP-ADDRESS<br>OFF | If only one pump is used, the setting remains OFF. If several pumps are connected via the RS-485 |
|---|---|

interface (max. 4) each pump must be allocated its own address number.

**Each address may only be used once!**

Press ⊠ on the Hydrovar-*Smart* to change to

### 7.22.2 ADC Reference

| ADC REFERENCE<br>Local | Reference for the local ADC (Analogue/Digital-Converter) or SIO (RS485 interface). |
|---|---|

LOCAL: Actual value from transmitter (Terminal X1/ 1-2)
REMOTE: Actual value via RS-485 (Terminal X5 or X6 / 1-2-3)

To leave the submenu press the ⊠ longer than 3 sec. to change to

| S U B M E N U<br>RS 485-Interface |
|---|

Press ⊠ on the Hydrovar-*Smart* to change to

### 7.23 Compensation Frequency

Control according to a system curve (increase of the set pressure, depending upon the flow rate or speed).

| FREQU. – LIFTING<br>30.0 Hz |
|---|

Adjustable between 6 Hz and the set MAXIMUM FREQUENCY, this setting states at which frequency the set pressure should be increased. That is the speed, where the pump works at the set pressure and at a flow rate=0 (can be read in the JOG MODE).

Press ⊠ on the Hydrovar-*Smart* to change to

### 7.24 Lift-Intensity

| LIFT – AMOUNT<br>0.0 % |
|---|

Adjustable from 0% to 99,9%; this value states how much the set value should be increased, when the pump is running at maximum speed (=maximum flow).

1. Setting of the required pressure (see: Inverter main menu)
2. Enter frequency for *demand = 0* and *set pressure = Actual Value* (see: Jog Mode ) ⇒ FREQU. LIFTING
3. Set desired lift at maximum speed, in % of *required pressure*.

Figure: **Lift-Intensity**

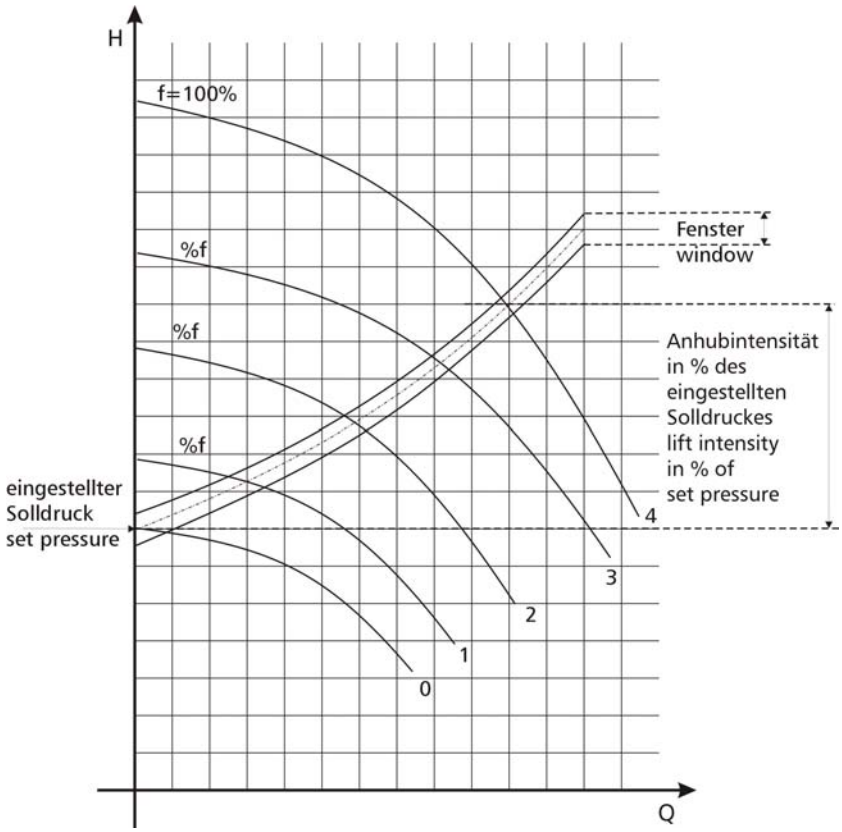


Press ⊠ on the Hydrovar-*Smart* to change to

### 7.25 Analogue output 1

| ANALOG OUT 1<br>Frequency |
|---|

Determines the source of the output signal (0-10VDC on terminals X9/5 and X1/11 (see chapter 4)

Selection possible over the ▲ and ▼ buttons:

→ **Setting Frequency**: At terminal X9/5 there is the 0-10VDC output of the speed signal for the connected VFD; At terminal X1/11 the 0-10VDC output corresponds to the actual value input signal on X1/2.

→ **Setting Actual value:** The source for the 0-10VDC signals are vice versa.

Standard setting = Frequency!

Press ⊠ on the Hydrovar-*Smart* to change to

### 7.26 Unit

| DIMENSION UNIT<br>Bar |
|---|

Adjustable units: bar, psi, $m^3$/h, g/min, ft, mH2O, % or without unit can be changed with ▲ or ▼.

Press ⊠ on the Hydrovar-*Smart* to change to

### 7.27 Automatic test run

| TEST RUN<br>after 100 h. |
|---|

Adjustable between 10...100 operating hours.

The timer for the automatic test run starts at every motor stop. After the motor is not running for the set time, the automatic test run starts:

The HYDROVAR-*Smart* starts the pump and ramps up with ramp time 1 up to the set TEST Frequency (see chapter 7.28.2), runs at this frequency for 1 second and stops the pump, by ramping down with ramp time 2.

Because the timer is updated only hourly, the can be a tolerance of this automatic test run timer of about 1 hour!

The automatic test run can be deactivated by holding the ▲ button and press the ▼ button shortly together.

-> *deactivated is shown in the 2nd line*.

To reactivate the automatic test run, you have to press the ▼ button.

***The automatic test run is only active, when the HYDROVAR-Smart is not switched off over the external release signal (X1/4 and X1/5) or the OFF button on the display unit!***

But the internal timer is running also, when the HYDROVAR-*SMART* is stopped and the test run timer will start again internally, either the HYDROVAR-*Smart* has done the test run or not.

Press ⊠ on the Hydrovar-*Smart* to change to

## 7.28 Submenu for manual test run

| |
|---|
| S U B M E N U<br>TEST RUN man. |

Press ⊠ for about 3 seconds to enter the submenu and the display changes to

### 7.28.1 Activate manual test run

| |
|---|
| TEST RUN man.<br>▲ + ▼ |

By simultaneously pressing ▲ + ▼ a test run will be released.

The function and operation of the started manual test run is similar to the automatic test run, described in chapter 7.27

Press ⊠ on the Hydrovar-*Smart* to change to

### 7.28.2 Test Frequency

| |
|---|
| TEST-FREQUENCY<br>30.0 Hz |

Frequency for manual and automatic test run.
Can be set from 6.0 Hz up to 70,0 Hz

Press ⊠ on the Hydrovar-*Smart* to change to

To leave the submenu press the ⊠ longer than 3 sec. to change to

| |
|---|
| S U B M E N U<br>TEST RUN man. |

Press ⊠ on the Hydrovar-*Smart* to change to

## 7.29 Submenu - Error

| |
|---|
| S U B ME N U<br>ERRORS |

Press ⊠ for about 3 seconds to enter the submenu and the display changes to

### 7.29.1 Conveyor Limit

| |
|---|
| CONVEYOR-LIMIT<br>disabled |

Disabled or adjustable between 0.00...SENSOR RANGE. To disable the conveyor limit, press ▼ till "*disabled*" or "0 bar" is shown on the display.
An adjusted value >0 has to be reached till the programmed "DELAY TIME". Doesn't this value be reached; the failure "VAL. RANGE CONTR." will be indicated and the pump stops.

Press ⊠ on the Hydrovar-*Smart* to change to

### 7.29.2 Delay Time

| DELAY TIME<br>2 Sec |
|---|

Adjustable between 0...100 Sec.
Delayed switch-off of the Hydrovar-*Smart* in case of low water, (terminals X1/6-X1/7 opened) and also for the conveyor limit.

Press ⊠ on the Hydrovar-*Smart* to change to

### 7.29.3 Automatic Error reset

| ERROR – RESET<br>OFF |
|---|

The parameter can be set OFF (no automatic reset) or, if you want to have an automatic error reset for 5 times, a delay time of the automatic restart (0-250 sec.) has to be set.
e.g. *ERROR-RESET = 5 seconds*
The Inverter tries to reset the failure for 5 times, between each try to reset the failure and restart the HYDROVAR-*Smart* there is a delay of 5 seconds. After 5 not successful restarts, the Hydrovar-*Smart* will shut off and an error message is shown.

The last five error signals are always stored in the Error memory 1 to 5 (main menu)

Press ⊠ on the Hydrovar-*Smart* to change to

### 7.29.4 Erase Error memory

| CLEAR ERRORS<br>0000 |
|---|

The error memory can be deleted by entering a password. If you want to know that, please contact your responsible distributor!

**To leave the submenu press the ⊠ longer than 3 sec. to change to**

| S U B ME N U<br>ERRORS |
|---|

Press ⊠ on the Hydrovar-*Smart* to change to

## 7.30 Operating Hours

| OPPERATING HOURS<br>OOOO h. |
|---|

operating time of the control unit (Hydrovar-*Smart* -supply is OK)
Reset by simultaneously pressing of ▲ + ▼ until TIMER – RESET appears.

Press ⊠ on the Hydrovar-*Smart* to change to

### 7.31 Display - Contrast

| DISP. CONTRAST<br>50 % |
|---|

Can be adjusted between 10...100%. For improved clarity of the display, depending on the installation position.

Press ⊠ on the Hydrovar-*Smart* to change to

### 7.32 Set Password

| SET PASSWORT<br>0066 |
|---|

The pre-set password can be changed if necessary.

Press ⊠ on the Hydrovar-*Smart* to change to

### 7.33 Operating Lock

| LOCK FUNCTION<br>OFF |
|---|

When [ON] is activated, it is not possible to make any changes in the main menu.
Only the ON/OFF (start and stop) buttons ▲ and ▼ are active.
In order to change the desired set value, the lock function must be switched off [OFF], than you can return into the main menu and the set pressure can be changed.

Press ⊠ on the Hydrovar-*Smart* to change to

### 7.34 Setting Default Values

| S U B M E N U<br>DEFAULT VALUES |
|---|

Press ⊠ for about 3 seconds to enter the submenu and the display changes to

#### 7.34.1 Default Values Europe

| DEFAULT EUROPE<br>▲ + ▼ |
|---|

Load the DEFAULT – PARAMETERS for Europe
Press buttons ▲ + ▼ for approx. 5 seconds.
(e.g.: maximum frequency 50 Hz, display unit = bar, Analog out 1 = Frequency)

Press ⊠ on the Hydrovar-*Smart* to change to

#### 7.34.2 Default Values USA

| DEFAULT USA<br>▲ + ▼ |
|---|

Load the DEFAULT – PARAMETER for the USA
Press buttons ▲ + ▼ for approx. 5 seconds
(e.g.: max. frequency 60 Hz, display unit = psi, Analog out 1 = Frequency)

| | |
|---|---|
| **Attention** | After reloading the default settings the display is flashing, to deactivate the flashing press the ⊠ until you reach the parameter "SAVE" (see next chapter) |

To leave the submenu press the ⊠ longer than 3 sec. and change to

| |
|---|
| S U B M E N U<br>DEFAULT VALUES |

Press ⊠ on the Hydrovar-*Smart* to change to

### 7.35 Saving

| |
|---|
| SAVE ???<br>▲ + ▼ |

All values must be saved (stored in an EEPROM) after changing. If they are not saved, all changes will be lost in case of a power failure!

*Saving: Press* ▲ + ▼ together, till the message "SAVED" is shown on the display.

**After saving, the display automatically changes to the 1st display after a few seconds.**

# 8 Error Signals

The active Error messages are every time shown in the selected language, but in the Error memory (main menu) the last 5 Error are stored only in English language!

## 8.1 Low Water

| LACK OF WATER :<br>E R R O R |
|---|

Remedy:
Check suction pressure or tank level!

If suction pressure or tank level is normal the unit restarts itself. If there is no suction pressure switch (e.g. circulating systems), bridge terminals X1/6 and X1/7.

## 8.2 Conveyor Control

| VAL.RANGE CONTR.<br>E R R O R |
|---|

The set minimum pressure threshold for monitoring pump delivery (delivery threshold) was not achieved within the set delay time.
At error reset ON the system is only shut down after 5 attempts of starting. If the delivery threshold is set at <0, this function is deactivated.
After the cause has been remedied, the malfunction can be reset by cutting off the power supply or pressing all three buttons (▲, ▼ and ✱) together for about 5 seconds.

## 8.3 Overheating – Motor

| MOTOR OVERHEAT<br>E R R O R |
|---|

Possible causes: insufficient cooling
Ambient temperature is too high, motor overloaded. After the cause has been remedied, the malfunction can be reset by cutting off the power supply or pressing all three buttons (▲, ▼ and ✱) together for about 5 seconds.

## 8.4 Pressure Sensor Error

| INVERTER - ERROR<br>INVERTER- ERROR |
|---|

Possible cause: The inverter error relay indicates and failure (contact open), or there is an installation error (see chapter. 4.1, terminals X9/3 and X9/4)
After the cause has been remedied, the malfunction can be reset by cutting off the power supply or pressing all three buttons (▲, ▼ and ✱) together for about 5 seconds.

## 8.5 Pressure Sensor Error I < 4 mA

| ACT. VALUE SENSOR<br>E R R O R |
|---|

Possible cause: Defective pressure transmitter or broken cable (damaged cable)
Check the pressure transmitter!

After the cause has been remedied, the malfunction can be reset by cutting off the power supply or pressing all three buttons (▲, ▼ and. ✱) together for about 5 seconds.

**An error indication is given over terminal X2/1, X2/2 and X2/3 (changeover contact). If no Error is active, the relay is switched on and terminals X2/2 and X2/3 are closed.**

| | |
|---|---|
| **Attention** | **If "AUTO - START ON" and "ERROR-RESET – ON" are programmed, the unit can start again automatically after a power failure.** |

### 8.6 Additional Error signals:

| | | | |
|---|---|---|---|
| ERROR 1 | : | EEPROM-ERROR (corresponding data block malfunction) | |
| ERROR 2 | : | Security error / Software protection error | |
| ERROR 4 | : | Display unit / Push buttons error (e.g.: jammed key) | |
| ERROR 5 | : | EPROM-error | |
| ERROR 6 | : | Program error: | Watchdog error |
| ERROR 7 | : | Program error: | Processor pulse error |
| ERROR 8 | : | Program error: | invalid processor command |

These ERROR signals can be reset by cutting off the power supply or pressing all three buttons (▲, ▼ and. ✱) together for about 5 seconds.
If the error signal should appear again, contact customer service and provide a detailed description of the error.

## 9 RS 485 - Interface

Standardised Bus-Interface for communication between the inverters (Hydrovar-*Smart* and/or Hydrovar Drive heads) and/or an overruling external control system.

The data protocol complies with ISO 1745 for RS 485 interfaces and contains the following configurations:

Transfer rate : 9600 Baud (1 Start bit, 8 Data, 1 Stop bit)

An interface inverter RS 232/RS 485 is necessary in case communication with a V24 interface of a PC or another external control system is wanted.

All parameters can be approached via the standard interface. The inline structure of the Hydrovar-*Smart* Drive head can be obtained upon request.

For further information see:

**serial data transmission – RS485**
**HYDROVAR-*Smart* – Protocol 120**

## 10 Auxiliary Texts

All auxiliary texts that are available in texts in the display window are listed here. To call them up press the buttons ⊡ + ▲; each auxiliary text then appears as "running text" in the second line of the window.

## 11 Maintenance

The Hydrovar-*Smart* unit does not require special maintenance.
When replacing the control card in a plant with more than one pump **ensure**, that **the same or compatible software version** is used in all Hydrovar-*Smart* units.

For further information, please ask your responsible distributor!

# 12 Diagram of all Software parameters

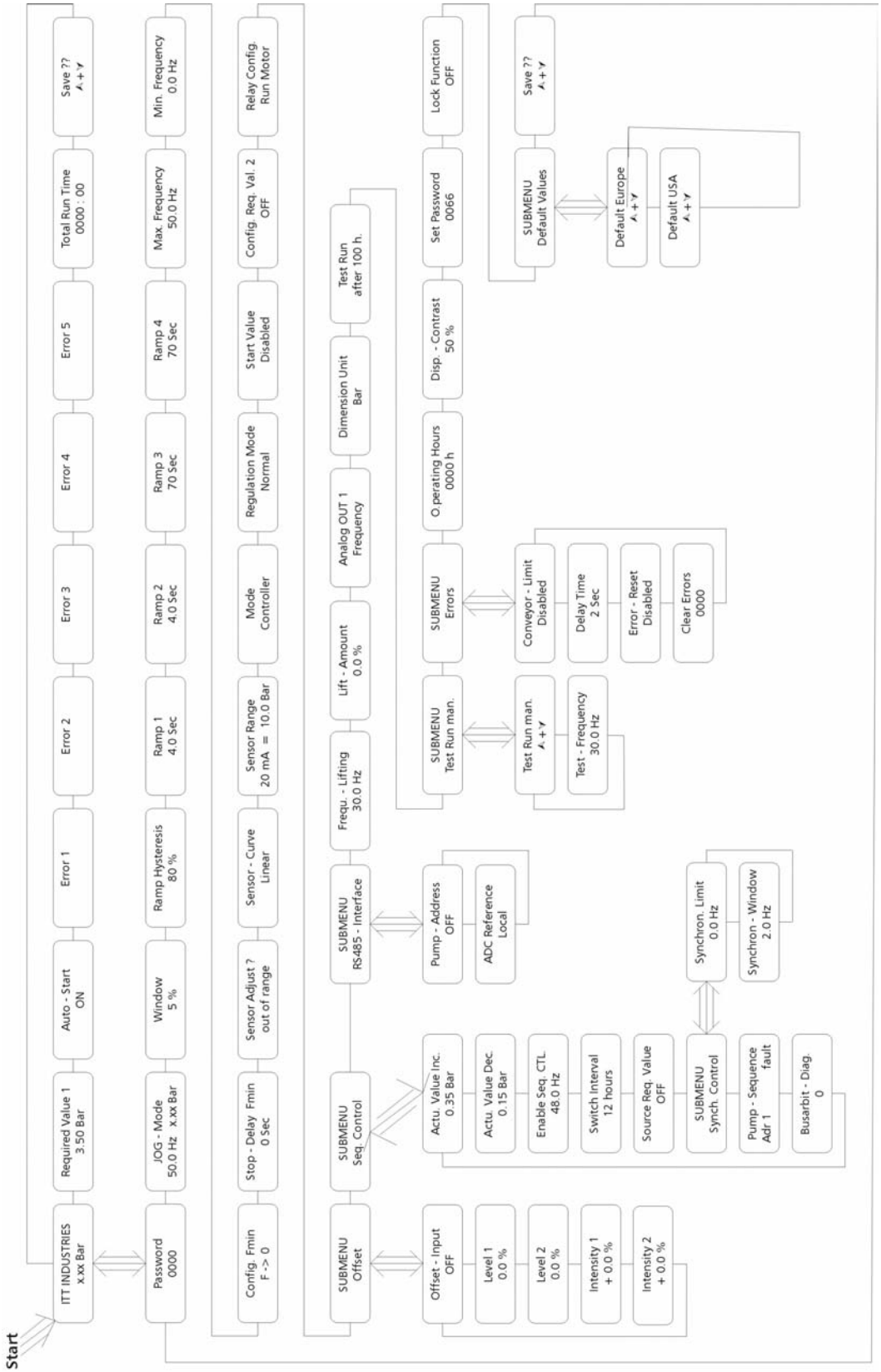

# Manufacturer's Declaration

**as defined in EC Machinery Directive 98/37/EEC,**
**Appendix II B**
**and the EMC Directive 89/336/EEC**

We herewith declare that the frequency converter of type

## Hydrovar*Smart*

is intended for assembly with other machines to a machine. It is forbidden to start using it until it has been established that the machine on this converter is to be installed or with which this converter is to be assembled complies with the provisions of EC Directives 93/44/EEC and 93/68/EEC.

Relevant technical standards and specifications, especially

EN 50081-1
EN 50082-2
EN 61010-1

.....

Dir. Ing. Sacher
Pumpenfabrik ERNST VOGEL GmbH
A-2000 Stockerau, Ernst Vogel-Str. 2

Stockerau, 29.07.02

Vogel Pumpen

ITT Industries
Engineered for life

VOGEL PUMPEN

Pumpenfabrik ERNST Vogel GmbH

A-2000 Stockerau
Ernst Vogel-Strasse 2
Telefon: 02266/604
Telefax: 02266/65 311
Internet: www.vogel-pumpen.com
www.hydrovar.com

Tochterunternehmen in Europa
Subsidiaries in Europa

LOWARA-VOGEL Szivattyú Kft.
H-8000 Székesfehérvár
Bakony u. 8
Telefon: 0036/22/512 640
Telefax: 0036/22/512 642

Lowara Vogel Polska sp.zo.o.
PL-40652 Katowice, ul. Worcella 16
Telefon: 0048/32/202 8904
Telefax: 0048/32/202 5452

VOGEL-ROCANO SA
CH-2087 Cornaux, Z.I. Prés-Bersot
Telefon: 0041/32/75 87 200
Telefax: 0041/32/75 87 200

LOWARA

## Hauptsitz-Headquarter

LOWARA s.r.l.
Via Lombardi, 14
36075 Montechio Maggiore
I-Vicenza – Italien
Telefon: +39 0444 707111
Telefax: +39 0444 492166
E-Mail: mk@lowara.ittind.com
www.lowara.com

## LOWARA-Niederlassungen-Subsidiaries

LOWARA DEUTSCHLAND GMBH
Biebigheimer Strasse 12
D-63762 Großostheim
Telefon: (0 60 26) 943-0
Telefax: (0 60 02) 943-210
E-Mail: info.de@lowara.ittind.com
www.lowara.de

LOWARA FRANCE S.A.
BP 7311
F-37073 Tours Cedex 2
Tel: +33 2 47881717
Fax: +33 2 47881700
E-Mail: info.fr@lowara.ittind.com
www.lowara.fr

LOWARA NEDERLAND B.V.
Postbus 54
NL-4180 BB Waardenburg
Tel: +31 418 655060
Fax: +31 418 655061
E-Mail: info.nl@lowara.ittind.com
www.lowara.nl

LOWARA PORTUGAL
Comércio de Bombas Lda
Praceta da Castanheira
Lote 6 Barca
P-4470 Maia
Tel: +351 22 9478550
Fax: +351 22 9478570
E-Mail: lowaraportugal@mail.telepac.pt
www.lowara.pt

LOWARA IRELAND Ltd.
59 Broomhill Drive
Tallaght Industrial Estate
Tallaght – Dublin 24
Tel: +35 31 4520266
Fax: +35 31 4520725
www.lowara.ie

LOWARA UK Ltd.
Millwey Rise Industrial Estate
Axminster
GB-Devon EX13 5HU
Tel: +44 1297 630230
Fax: +44 1297 630270
E-Mail: uksales@lowara.ittind.com
www.lowara.co.uk

LOWARA UK Ltd.
North Foundry, Doncaster Road
GB-Ferrybridge
WF 11 8 NW Knottingly
West Yorkshire
Tel: +44 1 977 607 267
Fax: + 44 1 977 607 226

ITT FLUID TECHNOLOGY INT.(ASIA PACIFIC) PTE Ldt.
298 Tiong Bahru road, 03-04/06 Tiong Bahru Plaza
Singapore 168730
Tel: +65 2763693
Fax: + 65 2763685

ITT FLUID TECHN. INT. (AUSTRALIA) PTY Ltd.
18 Commercial Drive, Dandenong South
Victoria 3175 AUSTRALIA
Tel: +61 3 97065066
Fax: +61 3 97066065